PRIMA Art

Art Conservation STEREOMICROSCOPE

LABOMED®
ideas for vision

PROGRESS THROUGH INNOVATION

LABOMED®

PRIMA Art

At LABOMED, harmony has always been our guiding principle when designing products. Staying true to this philosophy, we proudly introduce a new dimension in performance, flexibility and economy for modern ART restoration practices the - PRIMA Art conservation stereo microscope Each stereo microscope is built to perform under the most demanding of environments. The PRIMA Art offers an array of configurations and ergonomic accessories to address all art conservators needs.

FOR THE MOST DEMANDING ART WORKS

abcgallery.com - Internet's biggest art collection

Over the years, the stereo microscope has become a standard tool of use for a diverse set of ART RESTORATION applications from routine cleaning to delicate restorative painting and repair. Today, ART CONSERVATIONISTS in the restorative community want their stereo microscopes to be more agile, versatile and efficient than ever before. Answering this call, LABOMED was the first to develop a single LED-based illumination concept for an Art microscope. That design leadership has delivered an evolved illumination system that is highly efficient, cool, and offers a truly white LED with Lux values nearing that of Xenon, but with a 60,000 hour rated bulb life.

Given most MUSEUMS have spatial constraints, a microscope needs to be more compact than ever. Housing the LED light source and electronics within the PRIMA arm assembly eliminates the need for bulky illumination housing, yielding an overall space saving of approximately 20% compared to conventional Xenon and Halogen systems.

The PRIMA Art conservation stereo microscope comes equipped with an Apochromatic optical system that promises the most vivid and honest images in its class. This is achieved with LABOMED's proprietary *MaxLite™* coatings that provide highest efficiency in transmission and reflection through the entire visible spectrum. *MaxLite™* renders optics with excellent anti-fungal, anti-fog and scratch resistant properties.

To address digital documentation needs, a host of digital SLR, video camera, and 'C' adapters are made available with the *ProLine* in addition to LABOMED's proprietary *iVu* ulti-functional imaging solution.

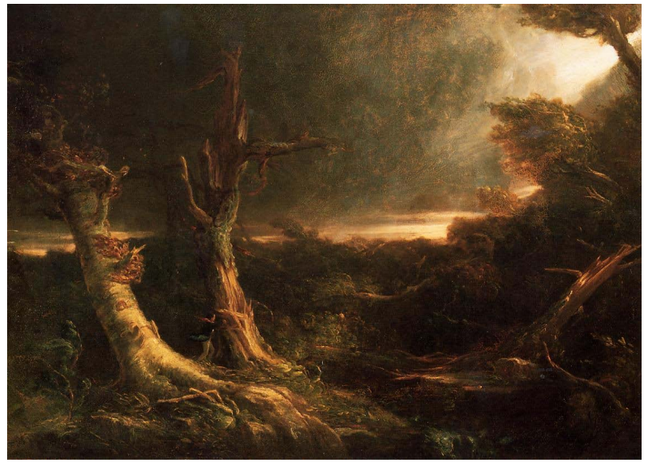

PRIMA Art ADVANTAGES

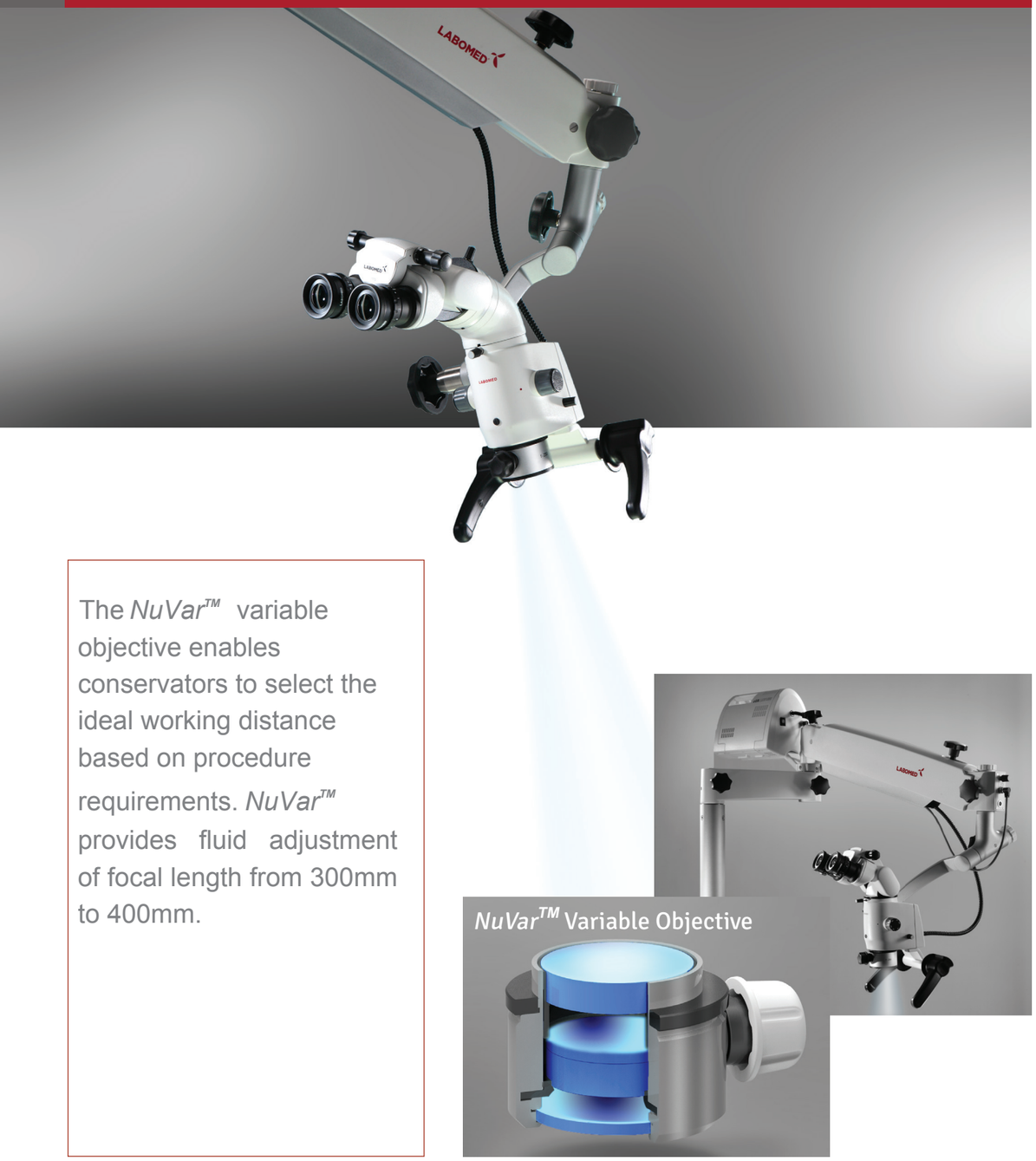

The *NuVar™* variable objective enables conservators to select the ideal working distance based on procedure requirements. *NuVar™* provides fluid adjustment of focal length from 300mm to 400mm.

The PRIMA Art comes with a clip-on objective protector to shield the optics from spray - back. Floor, wall, ceiling, and traditional table mounting options are available, as well as an extra long suspension arm (providing an additional ~250mm) for further removed mounting orientations. A host of eyepiece and objective options are available to further customize the PRIMA Art.

Wall Mount

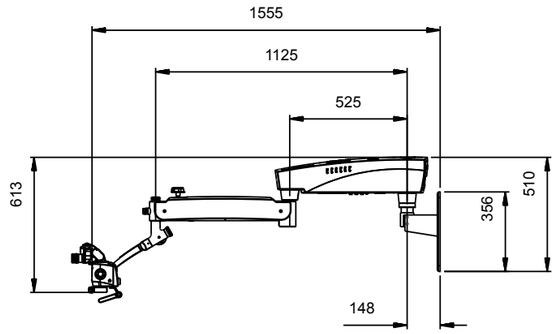

Table Mount

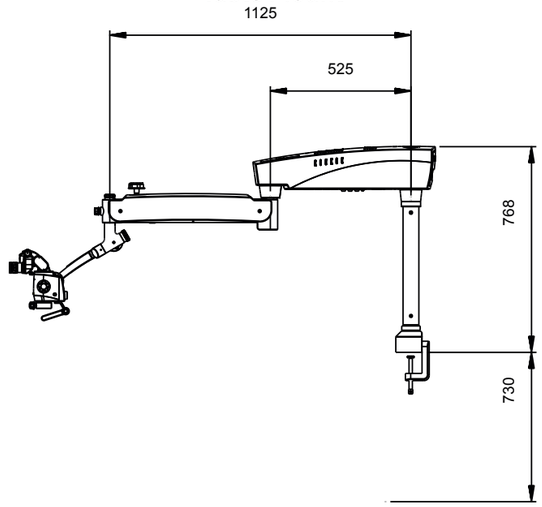

Ceiling Mount

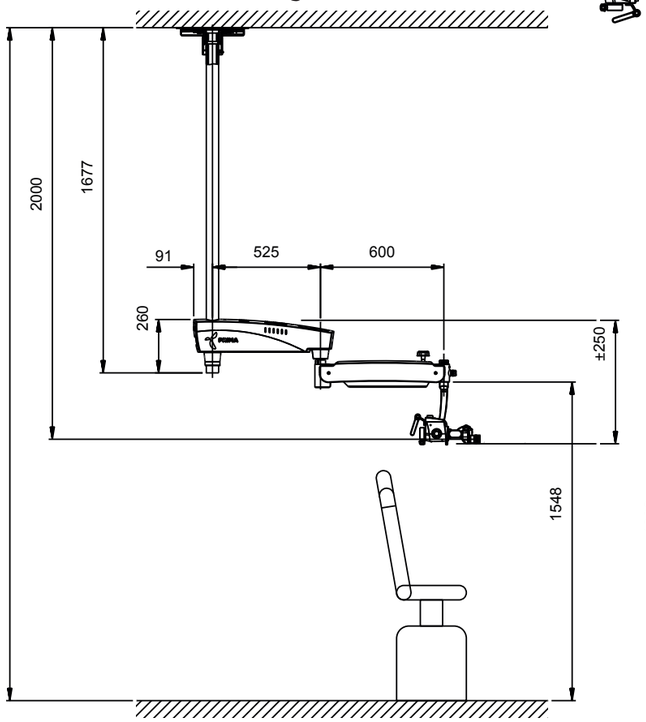

Floor Mount

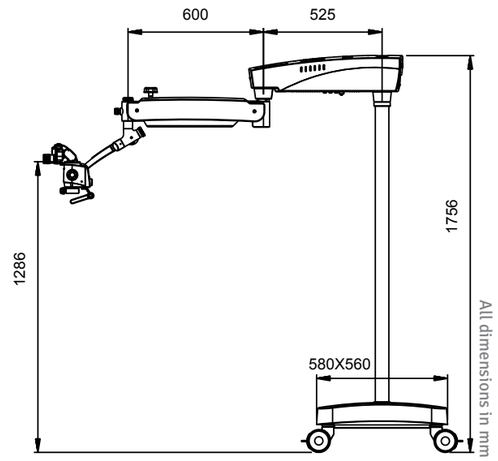

All dimensions in mm

Art Conservation STEREO MICROSCOPE

SPECIFICATIONS

Binocular tubes	0-210° tiltable ergonomic head
Eyepieces	WF 10X/18 mm with eye guards, diopter adjustment ± 5 mm and diopter lock; Optional: WF 12.5X/18 mm
Apochromatic magnichanger	5 step: 0.4X, 0.6X, 1.0X, 1.6X, 2.5X
Objective	f-250 mm, manual fine focus, objective lens protector Options: f-300 mm; f-400 mm; *NuVar* system which provides continuous focal length adjustment from 300-400 mm
Light source	50W LED
Built-in filters	Green and Yellow
Vertical movement of arm	550 mm
Microscope carriers	120° carrier
Optional accessories	Beam splitter straight/inclined Rotoplate and/or Extender *ProLine* range of camera adapters *iVu* S5 5MP integrated digital camera module with on-device capture button and SD card; USB v2.0 and HDMI (1080p) ports

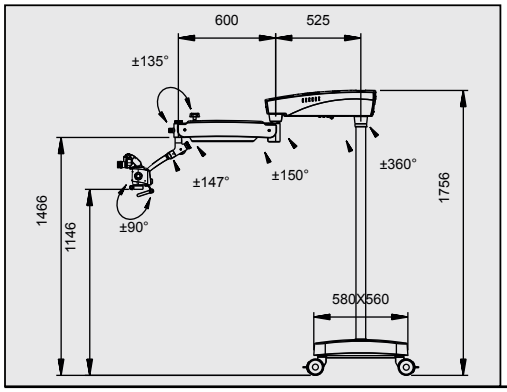

All dimensions in mm

DESCRIPTION	CONFIGURATION	CATALOG NO.
Prima Art	Basic	6138000-000
Prima Art	Motorized fine focus	6138000-100

LABOMED®

Labo America, Inc.
920 Auburn Court
Fremont, CA 94538

Tel: (510) 445-1257
Fax: (510) 445-1317

ISO 9001 : 2008

Distributor

Meyer Instruments, Inc.
4202 Bear Lodge Court
Houston, TX 77084
281-579-0342
www.meyerinst.com